Ex UniCase

ATEX/IECEx Tablet



ATEX / IECEx certified for **Zone 2 / 22**

Universal and reusable UniCase certified enclosure

Enables the use of **standard tablets** in hazardous areas

Full access to buttons, cameras, audio and charging port

Impact-resistant enclosure and screen

Simple installation, supported by clear documentation

Armadex Ex UniCase

The Ex UniCase is a certified enclosure that enables the use of a standard commercial tablet in ATEX Zone 2 / 22 hazardous areas.

The enclosure is compatible with multiple tablet models, allowing the internal device to be replaced or upgraded while retaining the original certification of the housing. This eliminates the need for re-certification and extends the operational lifecycle of the solution.

Installation requires no specialist tools. Buttons, cameras, microphone, speakers, and charging port remain fully accessible, ensuring unrestricted functionality during operation.

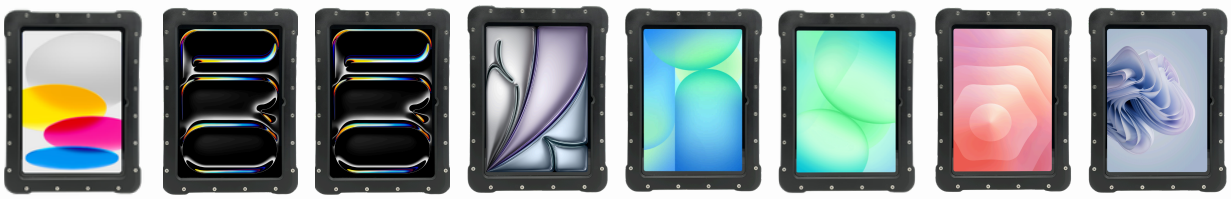

iPad A16 | iPad Pro M5 | iPad Pro M4 | iPad Air | Tab S10 FE | Tab A11 | Tab S11 | Surface Go

compatibility not limited to above models

Explosion Safety Specifications			
ATEX Zones	Zone 2 (Gas) and Zone 22 (Dust)	**EU Directive**	2014/34/EU (ATEX 114)
ATEX Marking – Gas	II 3G Ex nR IIC T6 Gc	**IECEx Marking – Gas**	Ex nR IIC T6 Gc
ATEX Marking – Dust	II 3D Ex tc IIIC T85°C Dc	**IECEx Marking – Dust**	Ex tc IIIC T85°C Dc
Type Examination Cert.	OBAC 26ATEX0194X	**IECEx Certificate**	IECEx OBAC 26.0005X
Applied ATEX Standards	EN IEC 60079-0:2018, EN IEC 60079-15:2019, EN IEC 60079-31:2024	**Applied IECEx Standards**	IEC 60079-0:2017, IEC 60079-15:2017, IEC 60079-31:2022

ARMADEX

Tinstraat 33 2984 AN
Ridderkerk,
The Netherlands

+31 (0) 85 0713041
www.armadex.com
info@armadex.com

V2 - 6 - 2026

Ex UniCase

ATEX/IECEx Tablet

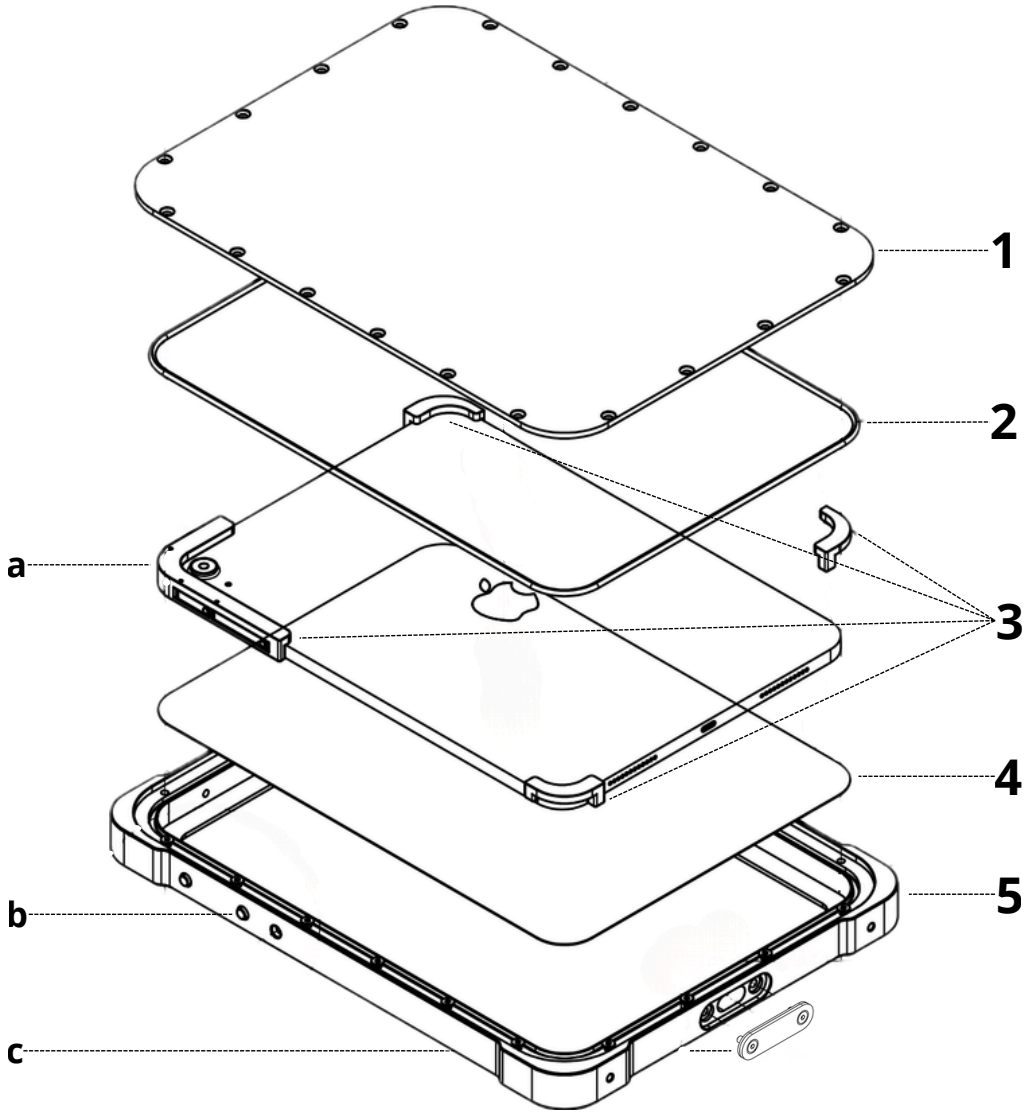

(1) Transparent hard-coated anti-static polycarbonate back cover providing external protection.
(2) 3 mm silicone rubber O-ring ensuring sealing between back cover and enclosure.
(3) Device specific, modular ABS corner inlays for tablet positioning.
(4) Impact-resistant Gorilla® Glass display window protecting the touchscreen.
(5) Main UniCase enclosure manufactured from ESD-safe POM-C.

(a) Button interface corner inlay enabling mechanical operation of the tablet buttons.
(b) Physical tablet buttons, fully operable through the UniCase interface.
(c) USB-C port sealing cover protecting the charging port during operation.

Tinstraat 33 2984 AN
Ridderkerk,
The Netherlands

+31 (0) 85 0713041
www.armadex.com
info@armadex.com

Ex UniCase

ATEX/IECEx Tablet



OBAC

Osrodek Badan, Atestacji i Certyfikacji Sp. z o.o.
44-121 Gliwice, ul. Łabędzka 21

(1) **TYPE EXAMINATION CERTIFICATE**

(2) Equipment, components and protective systems intended for use in potentially explosive atmospheres. Directive 2014/34/EU of the European Parliament and of the Council of 26 February 2014.

(3) Type examination certificate No: **OBAC 26 ATEX 0194X, Issue 0**

(4) Product: **Armadex Ex UniCase Small, Medium or Large**

(5) Manufacturer: **Armadex Explosion Protection B.V.**

(6) Address: Tinstraat 33, 2984 AN Ridderkerk, The Netherlands

(7) This equipment, product or protective system and any acceptable variation thereto is specified in the schedule to this certificate and the documents therein referred to.

(8) Ośrodek Badań, Atestacji i Certyfikacji OBAC Sp. z o.o. (The Institute for Research and Certification „OBAC" Ltd) certifies that this equipment, component or protective system has been found to comply with the Essential Health and Safety Requirements relating to the design and construction of equipment, component or protective systems intended for use in potentially explosive atmospheres given in Annex II to the European Council Directive 2014/34/EU.
The examination and test results and the list of agreed technical documentation are recorded in the confidential Report no OBAC/26/ATEX/0194.

(9) Compliance with the Essential Health and Safety Requirements has been assured by compliance with:

EN IEC 60079-0:2018
EN IEC 60079-15:2019
EN IEC 60079-31:2024

(10) If the sign „X" is placed after the certificate number, it indicates that the product concerned is subject to specific conditions of use specified in the schedule to this certificate.

(11) This certificate relates only to the design, assessment and tests of the specified equipment according to the Directive 2014/34/EU. The certificate does not apply to further requirements of the Directive relating to the manufacture and placing on the market of this equipment.

(12) The marking of the equipment, component or protective system must include the following:

II 3G Ex nR IIC T6 Gc
II 3D Ex tc IIIC T85°C Dc

Gliwice, 12 May 2026

Head of Certification Body
Piotr Tarnawski

Druk nr OBAC/PO-6/F3 wyd. 2 Page 1 of 2

Page 2 of 2

IECEx Certificate of Conformity

INTERNATIONAL ELECTROTECHNICAL COMMISSION
IEC Certification System for Explosive Atmospheres
for rules and details of the IECEx Scheme visit www.iecex.com

Certificate No.: **IECEx OBAC 26.0005X** Page 1 of 3 Certificate history:
Status: **Current** Issue No: 0
Date of Issue: 2026-05-28
Applicant: **Armadex Explosion Protection Ltd.**
43 Owston Road
Doncaster DN6 8DA
United Kingdom
Equipment: **Armadex Ex UniCase Small, Medium or Large**
Optional accessory:
Type of Protection: **type of protection "n": protection by enclosure "t"**
Marking: **Ex nR IIC T6 Gc**
Ex tc IIIC T85°C Dc

Approved for issue on behalf of the IECEx Certification Body: **Piotr Tarnawski**
Position: **Head of Certification Body**
Signature: (for printed version)
Date: (for printed version)

1. This certificate and schedule may only be reproduced in full.
2. This certificate is not transferable and remains the property of the issuing body.
3. The Status and authenticity of this certificate may be verified by visiting www.iecex.com or use of this QR Code.

Certificate issued by:
Osrodek Badan, Atestacji i Certyfikacji OBAC Sp. z o.o.
Labedzka 21
44-121 Gliwice
Poland

ARMADEX

Tinstraat 33 2984 AN
Ridderkerk,
The Netherlands

+31 (0) 85 0713041
www.armadex.com
info@armadex.com